NOTES:

1. SUBSTRATE: N-SF5

2. COATING (APPLY ACROSS CLEAR APERTURE)

   S1: R(avg) ≤1.5% @ 600 - 1050nm
   S2: R(avg) ≤1.5% @ 600 - 1050nm

3. EDGES: FINE GROUND

4. CENTERING: 3-5 ARCMIN

5. ASPHERE FIGURE ERROR: 0.75 µm RMS

6. ASPHERIC SURFACE DESCRIBED BY (REF. COEFFICIENT TABLE)

$$Z_{ASPH}(Y) = \frac{(1/RADIUS)*Y^2}{1+\sqrt{1-(1+k)*(1/RADIUS)^2*Y^2}} + D*Y^2 + E*Y^4 + F*Y^6 + G*Y^8 + H*Y^{10} + J*Y^{12} + L*Y^{14}$$

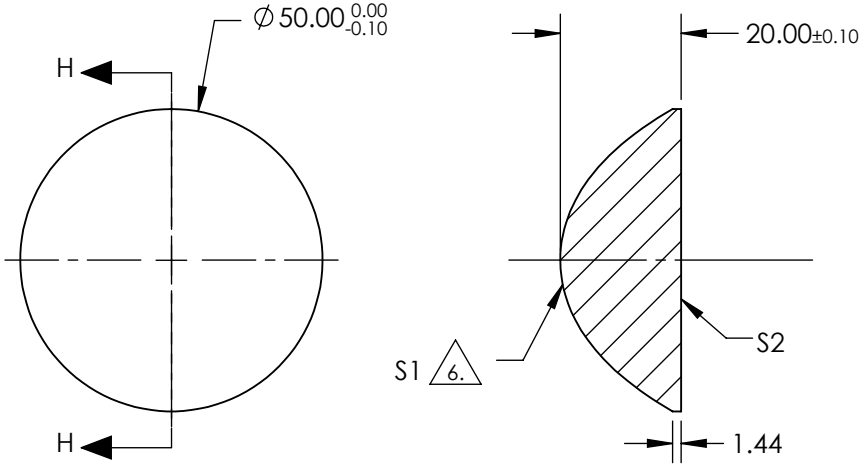

SECTION H-H

COEFFIECIENT TABLE 6.	
COEFFIECIENT	S1
SEMI-DIAMETER	25.000000E+00
(1/RADIUS)	4.955156E-02
k	-9.514491E-01
D	0.000000E+00
E	6.256875E-06
F	2.852864E-09
G	-9.569919E-13
H	-2.302468E-15
J	0.000000E+00
L	0.000000E+00

FOR INFORMATION ONLY:
DO NOT MANUFACTURE PARTS TO THIS DRAWING

SPECIFICATIONS SUBJECT TO CHANGE WITHOUT NOTICE DIMENSIONS ARE FOR REFERENCE ONLY

REV. A	S1	S2
SHAPE	CONVEX	PLANO
RADIUS	20.181	INFINITY
SURFACE QUALITY	60-40	60-40
CLEAR APERTURE	90%	90%
BEVEL MAX	PROTECTIVE AS NEEDED	PROTECTIVE AS NEEDED

EFL @ 587.6µm	30	Edmund Optics®	
BFL @ 587.6µm	18.04		
THIRD ANGLE PROJECTION		TITLE	50mm DIA., 0.83 NUMERICAL APERTURE NIR COATED, ASPHERIC LENS
ALL DIMS IN	mm	DWG NO	67262
			SHEET 1 OF 1