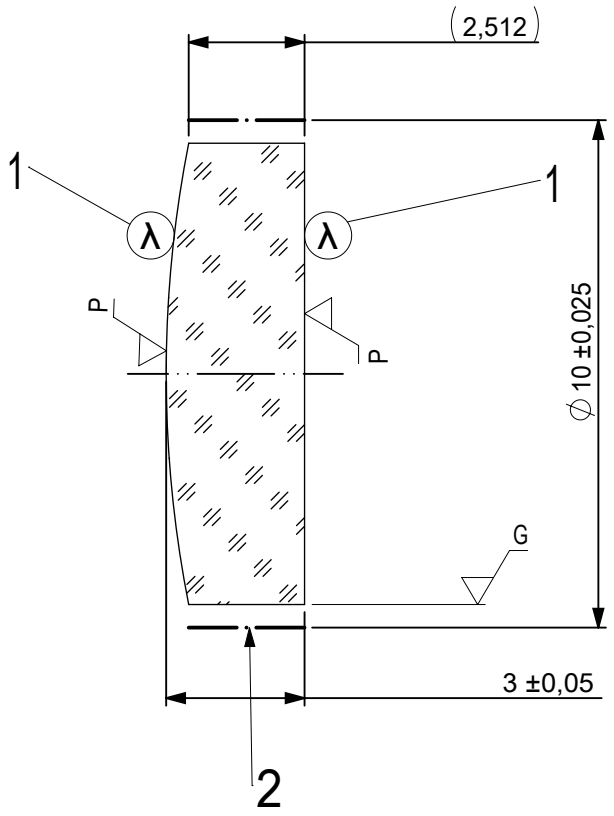

FOCAL LENGTH (EFL): 50 ±0,5

BACK FOCAL LENGTH (BFL): 48,02

1 AR COATING: VIS-NIR
R(ABS) ≤ 0,25% AT 880nm @ 0° AOI
R(AVG) ≤ 1,25% FROM 400-870nm @ 0° AOI
R(AVG) ≤ 1,25% FROM 890-1000nm @ 0° AOI

2 BLACKENED SURFACE

LEFT SURFACE	MATERIAL	RIGHT SURFACE
R 25,84±0,026 CX	GLASS N-BK7 517/642	R ∞ PL
Øe 9		Øe 9
3/ 3 (0,5) λ=632,8 nm		3/ 3 (0,5) λ=632,8 nm
4/ -		4/ 1,93'
5/ 40 - 20 (MIL-PRF-13830B)		5/ 40 - 20 (MIL-PRF-13830B)
6/ -		6/ -

PROTECTIVE CHAMFERS AS NEEDED	FIRST ANGLE PROJECTION	Edmund Optics®
ROHS: COMPLIANT / SCALE: NONE / λ = 587,6nm		
SPECIFICATIONS SUBJECT TO CHANGE WITHOUT NOTICE. DIMENSIONS ARE FOR REFERENCE ONLY		TITLE: 10,0mm Dia, x 50,0mm FL, VIS-NIR, Inked, Plano-Convex Lens
FOR INFORMATION ONLY: DO NOT MANUFACTURE PARTS TO THIS DRAWING	ALL DIMS IN: mm	
INDICATIONS IN ACCORDANCE WITH ISO 10110		DWG NO: 63525INK / SHEET SIZE: A4 / SHEET 1 OF 1