See all 4 Products in Family

TECHSPEC® 0.25X - 0.5X VariMagTL™ Telecentric Lens

0.25X - 0.5X VariMagTL™ Telecentric Lens, #88-385

Stock **#88-385** **14 In Stock**

- 1 + **€2.505**,00

ADD TO CART

Volume Pricing	
Qty 1+	**€2.505,00** each
Need More?	Request Quote

Prices shown are exclusive of VAT/local taxes

Product Downloads

General

Series:
VariMag TC Series

Stock No. of Mounting Clamp:
#56-025 Sold Seperately

Type:
Telecentric Lens

Special Type of Lens:
Variable Magnification Telecentric

Physical & Mechanical Properties

Iris Option:
Variable

Length (mm):
177.90

Maximum Diameter (mm):
65.0

Weight (g):
942

Optical Properties

Resolution:
75 lp/mm @ >20%

Maximum Image Circle (mm):
11.00

Typical Telecentricity @ 588nm (°):
<0.1

Typical Distortion @ 588nm (%):
<0.1

Primary Magnification PMAG:
0.25X - 0.5X

Working Distance (mm):
100.1 - 145

FOV @ Max Sensor Format, H x V (mm):
35.2 x 26.4 - 17.6 x 13.2

Aperture (f/#):
f/6 - Closed

Depth of Field (mm):
Variable

Lens Wavelength Range:
VIS

Sensor

Maximum Sensor Format:
2/3"

Pixel Size (µm):
2.74

Threading & Mounting

Filter Thread:
M62 x 0.75 (Female)

Mount:
C-Mount

Regulatory Compliance

Certificate of Conformance:
View

Product Details

- Variable Magnification Telecentric Lens
- Up to 5 MegaPixels, 3.45µm Pixel Size Sensors
- 2/3", C-Mount Telecentric Lens
- Magnification from 0.15X to 3X

TECHSPEC® VariMagTL™ Telecentric Lenses are designed for applications that may require constant adjustment of a system's field of view. Each lens provides a range of magnifications that users can adjust or lock down with a set screw. With coverage for up to 2/3" format sensors, these telecentric lenses feature compact, C-mount compatible designs for easy system integration. TECHSPEC VariMagTL™ Telecentric Lenses also include an adjustable iris to control light throughput and improve image quality. These lenses are ideal for use in semiconductor or electronics inspection and factory automation applications.

These lenses won the Silver Level 2015 Innovators Award.

Note: Customized fixed versions are also available to meet volume requirements. Please contact technical support to discuss your specific requirements.

Technical Information

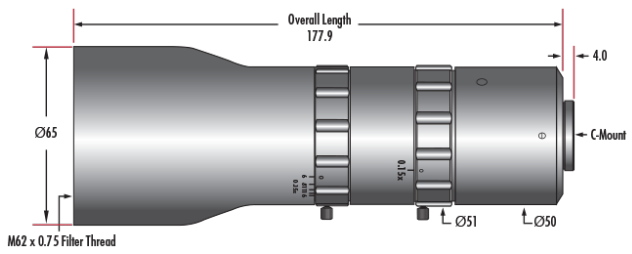

0.25X - 0.5X Telecentric VariMagTL™ Lens (#88-385)

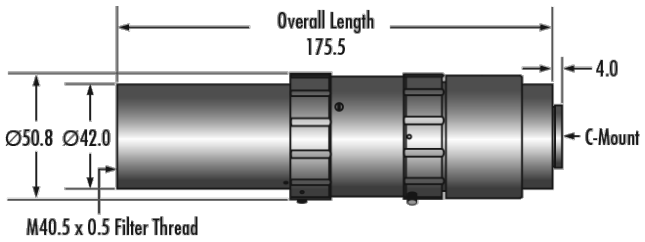

0.5X - 1.0X Telecentric VariMagTL™ Lens (#88-386)

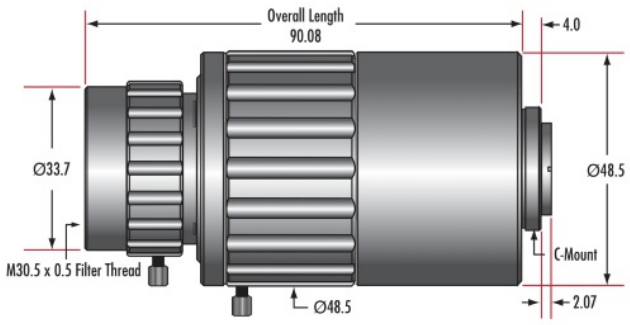

1.0X - 3.0X Telecentric VariMagTL™ Lens (#88-387)

0.25X-0.50X Telecentric Lens, #88-385						
Magnification	**0.25X**	**0.30X**	**0.35X**	**0.40X**	**0.45X**	**0.50X**
Working Distance (mm)	145	124.5	112	104	100.2	100.1
Field of View (mm)*	35.2	29.3	25.1	22	19.6	17.6
0.5X- 1.0X Telecentric Lens, #88-386						
Magnification	**0.5X**	**0.6X**	**0.7X**	**0.8X**	**0.9X**	**1.0X**
Working Distance (mm)	115	106	102	100	100	100
Field of View (mm)*	17.6	14.67	12.6	11	9.78	8.8
1.0X- 3.0X Telecentric Lens, #88-387						
Magnification	**1.0X**	**1.5X**	**2.0X**	**2.5X**	**3.0X**	
Working Distance (mm)	71.6	61	55.6	52.4	50.3	
Field of View (mm)*	8.8	5.87	4.4	3.5	2.93	