# TECHSPEC® 100mm, f/16 Ci Series Fixed Focal Length Lens

TECHSPEC® Ci Series Fixed Focal Length Lenses

Stock **#15-513** **20+ In Stock**

- 1 + **€350.00**

**ADD TO CART**

| Volume Pricing | |
|---|---|
| Qty 1+ | **€350,00** each |
| Need More? | Request Quote |

Prices shown are exclusive of VAT/local taxes

**Note:** This item requires accessories for use | Learn More

Product Downloads

## SPECIFICATIONS

### General

**Series:**
Ci Series

**Type:**
Fixed Focal Length Lens

## Physical & Mechanical Properties

**Iris Option:**
Fixed

**Length (mm):**
81.80

**Maximum Diameter (mm):**
48

**Outer Diameter (mm):**
48

**Maximum Rear Protrusion (mm):**
1.64

## Optical Properties

**Field of View at Max Sensor Format:**
Horizontal: 7.28°
Vertical: 5.48°
Diagonal: 9.07°

**Horizontal Field of View, 2/3" Sensor:**
5.02°

**Horizontal Field of View, 1/1.8" Sensor:**
4.11°

**Horizontal Field of View, 1/2" Sensor:**
3.66°

**Horizontal Field of View, 1/2.5" Sensor:**
3.29°

**Maximum Image Circle (mm):**
21.60

**Numerical Aperture NA, Object Side:**
0.004

**Number of Elements (Groups):**
6 (5)

**Focal Length FL (mm):**
100.00

**Working Distance (mm):**
750 - ∞

**Aperture (f/#):**
f/16

**Coating Specification:**
425 - 675nm BBAR

**Entrance Pupil Position (mm):**
31.419

**Object Space Principal Plane (mm):**
21.64

**Image Space Principal Plane (mm):**
-98.34

**Maximum Distortion (%):**
0.866

**Exit Pupil Position (mm):**
-50.496

**Lens Wavelength Range:**
VIS

## Sensor

**Maximum Sensor Format:**
1"

**Pixel Size (µm):**
2.74

## Threading & Mounting

**Filter Thread:**
M46 x 0.75 (Female)

**Mount:**
C-Mount

## Environmental & Durability Factors

**Type of Ruggedization:**
Industrial (Fixed Aperture with Simplified Mechanics)

## Regulatory Compliance

**Certificate of Conformance:**

View

# PRODUCT DETAILS

- Up to 2/3", C-Mount Lens
- Up to 7.5 MegaPixels, 2.8µm Pixel Size Sensors
- Instrumentation (Ci) Versions of our C Series Lenses with Streamlined Mechanical Designs and Fixed Apertures
- 3.5mm to 50mm Focal Length
- **Ruggedized (Cr) Designs** Also Available

TECHSPEC® Ci Series Fixed Focal Length Lenses are a streamlined version of our C Series Fixed Focal Length Lenses. They feature the same low lens-to-lens variation and broadband anti-reflection (BBAR) coating for maximum light transmission, while offering reduced weight and size. An adjustable, lockable focus allows for setting and locking the best focus position for instrumentation integration. TECHSPEC® Ci Series Fixed Focal Length Lenses are designed specifically for volume integration into applications such as factory inspection and automation to benchtop biomedical devices. The Ci Series offers a wide range of aperture options, ensuring maximum flexibility of resolution, throughput, and depth of field.

Edmund Optics has created a family of high performance optical designs (the C Series family) and developed 6 customized optomechanical solutions targeted for specific applications. These lens sub-families utilize the same optics as the C Series lenses providing the same optical performance in a variety of optomechanical solutions to meet your application requirements:

- **C Series**: Features locking cam focus and iris adjustment and is the most adjustable version of these optical designs; they are the typical high quality machine vision lenses. Also available with a **VIS-NIR Broadband Anti-Reflection (BBAR) Coating.**
- Ci Series: Simplified mechanics featuring fixed apertures with compact housing. **Industrial Ruggedization** for reduced size, cost, and locked focus.
- **Cr Series**: All optics glued in place and a locking C-clamp focus ring. **Stabilized Ruggedization** for reduced pixel shift and improved focus stability.
- **Cx Series**: Modular, flexible mechanics allows lenses to be taken apart for easy integration of accessories such as liquid lenses, apertures, and more.
- **Liquid Lens Cx Series**: Designed with an integrated liquid lens for quick autofocus.
- **Cw Series:** Waterproof, designed to meet IEC **Ingress Protection** Code IPX7 and IPX9K.

# TECHNICAL INFORMATION

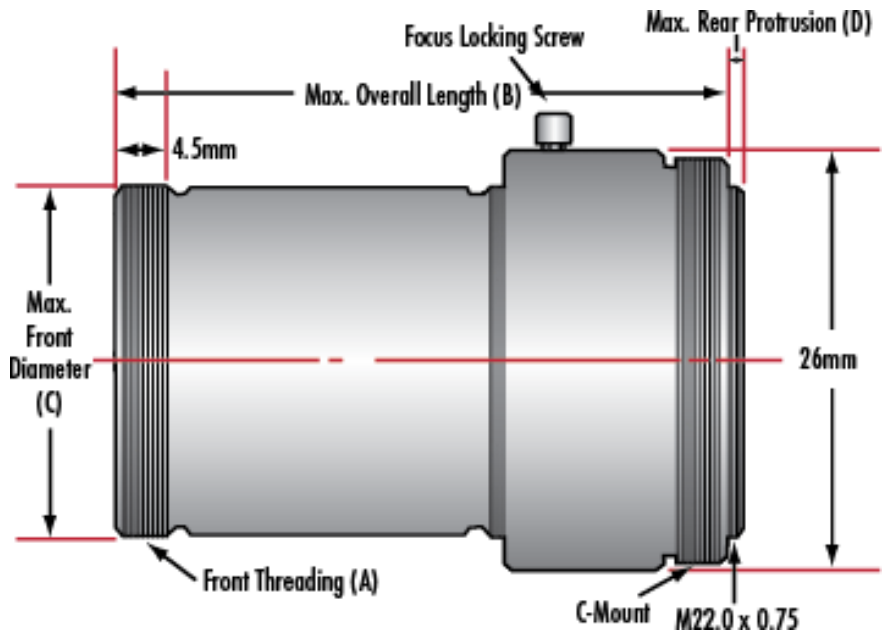

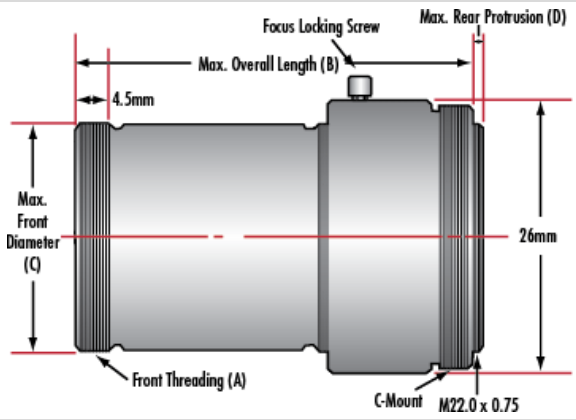
| Focal Length | A | B | C | D |
|---|---|---|---|---|
| 6mm | M34.0 x 0.5 | 47.8mm | 34mm | 1.17mm |
| 12mm | M22.0 x 0.75 | 29.0mm | 22mm | 0.96mm |
| 16mm | M22.0 x 0.75 | 40.8mm | 22mm | 1.09mm |
| 25mm | M22.0 x 0.75 | 29.9mm | 22mm | 1.33mm |
| 35mm | M25.5 x 0.5 | 41mm | 22.5mm | 3.82mm |
| 50mm | M30.5 x 0.5 | 49.5mm | 30.5mm | 2.06mm |