See all 76 Products in Family

TECHSPEC® 100mm, f/5.6 Ci Series Fixed Focal Length Lens

TECHSPEC® Ci Series Fixed Focal Length Lenses

Stock **#15-510** CONTACT US

- 1 + **€350**.00

ADD TO CART

Volume Pricing	
Qty 1-24	**€350,00** each
Qty 25+	**€315,00** each
Need More?	Request Quote

Prices shown are exclusive of VAT/local taxes

Note: This item requires accessories for use | Learn More

Product Downloads

General

Series:
Ci Series

Type:
Fixed Focal Length Lens

Physical & Mechanical Properties

Iris Option:
Fixed

Length (mm):
81.80

Maximum Diameter (mm):
48

Outer Diameter (mm):
48

Maximum Rear Protrusion (mm):
1.64

Optical Properties

Field of View at Max Sensor Format:
Horizontal: 7.28°
Vertical: 5.48°
Diagonal: 9.07°

Horizontal Field of View, 2/3" Sensor:
5.02°

Horizontal Field of View, 1/1.8" Sensor:
4.11°

Horizontal Field of View, 1/2" Sensor:
3.66°

Horizontal Field of View, 1/2.5" Sensor:
3.29°

Maximum Image Circle (mm):
21.60

Numerical Aperture NA, Object Side:
0.011

Number of Elements (Groups):
6 (5)

Focal Length FL (mm):
100.00

Working Distance (mm):
750 - ∞

Aperture (f/#):
f/5.6

Coating Specification:
425 - 675nm BBAR

Entrance Pupil Position (mm):
31.419

Object Space Principal Plane (mm):
21.64

Image Space Principal Plane (mm):
-98.34

Maximum Distortion (%):
0.866

Exit Pupil Position (mm):
-50.496

Lens Wavelength Range:
VIS

Sensor

Maximum Sensor Format:
1"

Pixel Size (µm):
2.74

Threading & Mounting

Filter Thread:
M46 x 0.75 (Female)

Mount:
C-Mount

Environmental & Durability Factors

Type of Ruggedization:
Industrial (Fixed Aperture with Simplified Mechanics)

Regulatory Compliance

Certificate of Conformance:
View

Product Details

- Up to 2/3", C-Mount Lens
- Up to 7.5 MegaPixels, 2.8µm Pixel Size Sensors
- Instrumentation (Ci) Versions of our C Series Lenses with Streamlined Mechanical Designs and Fixed Apertures
- 3.5mm to 50mm Focal Length
- **Ruggedized (Cr) Designs** Also Available

TECHSPEC® Ci Series Fixed Focal Length Lenses are a streamlined version of our C Series Fixed Focal Length Lenses. They feature the same low lens-to-lens variation and broadband anti-reflection (BBAR) coating for maximum light transmission, while offering reduced weight and size. An adjustable, lockable focus allows for setting and locking the best focus position for instrumentation integration. TECHSPEC® Ci Series Fixed Focal Length Lenses are designed specifically for volume integration into applications such as factory inspection and automation to benchtop biomedical devices. The Ci Series offers a wide range of aperture options, ensuring maximum flexibility of resolution, throughput, and depth of field.

Edmund Optics has created a family of high performance optical designs (the C Series family) and developed 6 customized optomechanical solutions targeted for specific applications. These lens sub-families utilize the same optics as the C Series lenses providing the same optical performance in a variety of optomechanical solutions to meet your application requirements:

- **C Series**: Features locking cam focus and iris adjustment and is the most adjustable version of these optical designs; they are the typical high quality machine vision lenses. Also available with a **VIS-NIR Broadband Anti-Reflection (BBAR) Coating.**
- Ci Series: Simplified mechanics featuring fixed apertures with compact housing. **Industrial Ruggedization** for reduced size, cost, and locked focus.
- **Cr Series**: All optics glued in place and a locking C-clamp focus ring. **Stabilized Ruggedization** for reduced pixel shift and improved focus stability.
- **Cx Series**: Modular, flexible mechanics allows lenses to be taken apart for easy integration of accessories such as liquid lenses, apertures, and more.
- **Liquid Lens Cx Series**: Designed with an integrated liquid lens for quick autofocus.
- **Cw Series:** Waterproof, designed to meet IEC **Ingress Protection** Code IPX7 and IPX9K.

Technical Information

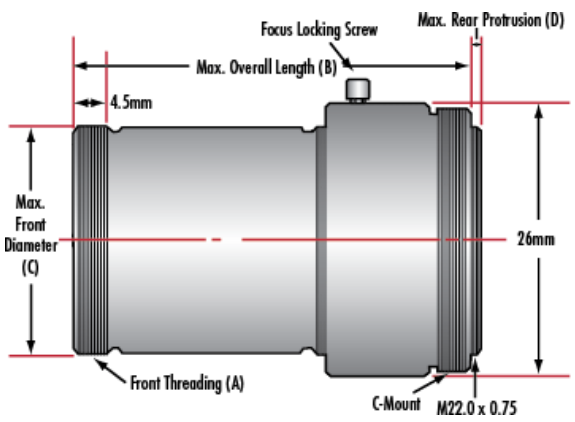

Focal Length	A	B	C	D
6mm	M34.0 x 0.5	47.8mm	34mm	1.17mm
12mm	M22.0 x 0.75	29.0mm	22mm	0.96mm
16mm	M22.0 x 0.75	40.8mm	22mm	1.09mm
25mm	M22.0 x 0.75	29.9mm	22mm	1.33mm
35mm	M25.5 x 0.5	41mm	22.5mm	3.82mm
50mm	M30.5 x 0.5	49.5mm	30.5mm	2.06mm

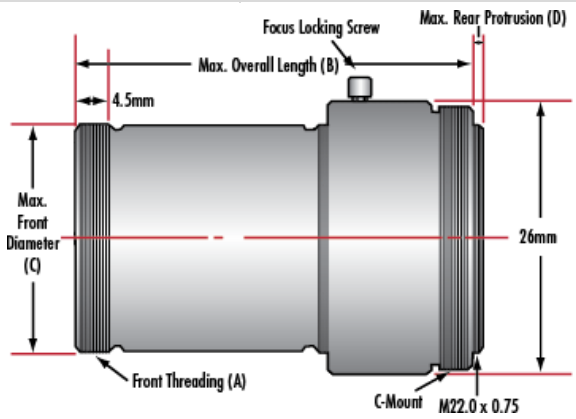

;