See all 7 Products in Family

2" Travel, 3"L x 1.75"W Ball Bearing Slide

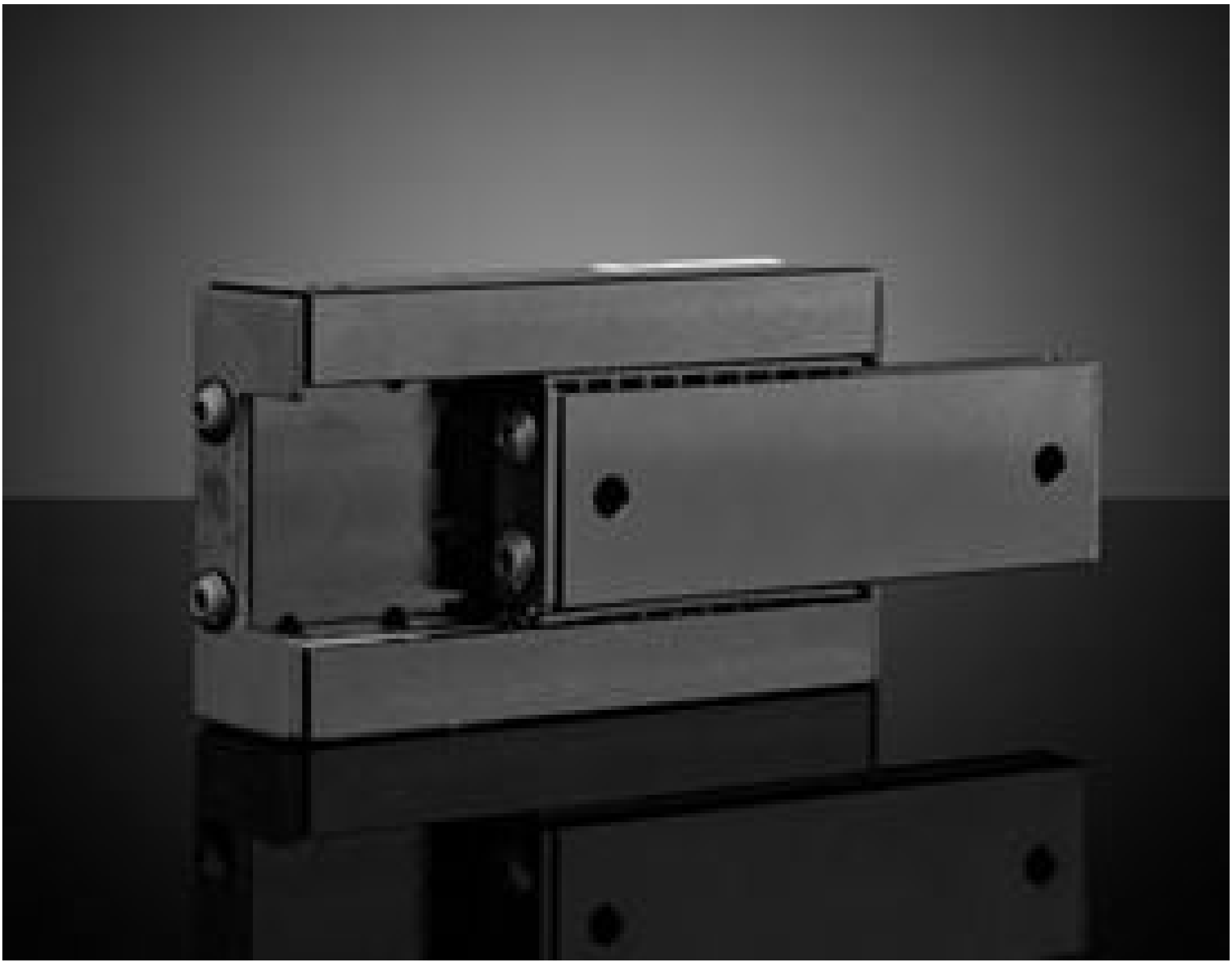

2" Travel, 3"L x 1.75"W Ball Bearing Slide, #37-361

Stock **#37-361** **3 In Stock**

- 1 + **€288**.00

ADD TO CART

Volume Pricing	
Qty 1+	**€288,00** each
Need More?	Request Quote

Prices shown are exclusive of VAT/local taxes

Product Downloads

General

Type: English

Physical & Mechanical Properties

Type of Movement: Linear (X)

Guide System: Ball Bearing

Stage Size (mm):

44.4 x 76.2

Travel (inches):
2

Construction:
Aluminum Top and Base/440C Stainless Steel Bearings

Height (inches):
0.75

Load Capacity, Normal (lbs):
40.0

S.H.C.S. C'bore:
(2) #6 on Base

Stage Size (inches):
1.75 x 3.00

Straight Line Accuracy (inches):
0.00008/inch of travel

Weight (lbs):
0.4

Hardware & Interface Connectivity

Type of Drive:
Manual

Threading & Mounting

Mounting Threads:
(12) 6-32 on Top

Regulatory Compliance

RoHS 2015:
Compliant

Certificate of Conformance:
View

Product Details

- High Straight Line Accuracy
- Low Wear, Low Friction Sliding Motion
- Preloaded to Eliminate Wobble and Unwanted Play

Linear Motion Ball Bearing Slides are mechanically simple linear motion devices comprised of a stationary base with a mobile carriage riding on top. One row of hardened steel balls on each side of the base provides the accurate, low-friction sliding motion between the stationary base and the top slide. Each row of bearings is contained between two hardened, precision steel rods. Linear Motion Ball Bearing Slides are preloaded to eliminate wobble and unwanted play in the system. Ball slides are functionally much more reliable than dovetail slides since there is no direct sliding contact between the top and bottom pieces. The slides also eliminate the rapid wear problems, regular lubrication requirements, and the skipping/jumping (caused by the increased force needed to initiate movement) that are characteristic of dovetail assemblies.

Technical Information

Dimensions (Inches)							Base Mounting Holes			Top Mounting Holes				Stock No.
Fig.	A	B	C	D	E	F	G	H	J	K	L	M	N	
B	0.59	1.12	0.32	0.24	0.24	1	0.19	0.75	#2	0.218	0.63	2-56	4	#53-849
B	0.59	2.12	0.32	0.24	0.24	1	0.37	1.38	#2	0.218	1.63	2-56	4	#53-850
B	1.00	1.68	0.50	0.36	0.36	1	0.22	1.25	#4	0.438	1.25	6-32	4	#53-853
A	2.62	2.62	1.00	1.48	0.61	-	0.31	2.00	#¼	-	2.00	10-32	8	#37-356
B	1.75	3.00	0.75	0.88	0.40	5.00	0.31	2.38	#6	1.000	0.50	6-32	12	#37-361

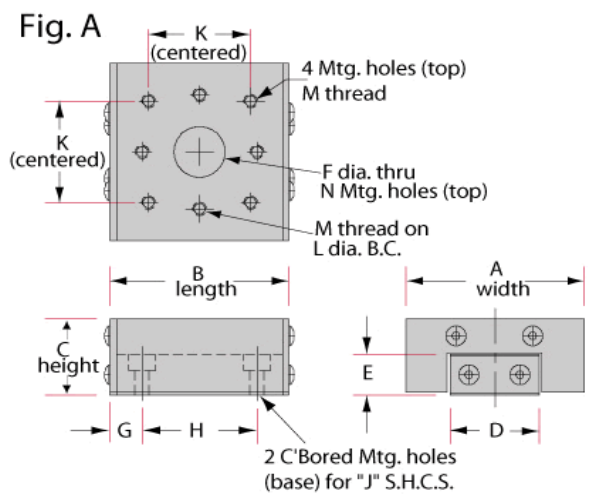

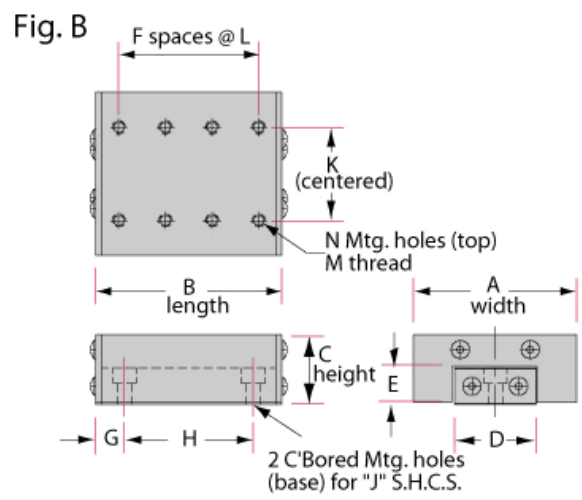

Type	A	B	C	D	E	F	G	Stock No.
Figure A	4"	0.69"	0.5"	6	-	-	-	#37-363
Figure A	5"	1.19"	1"					#37-364
Figure A	6"	1.69"	0.5"	10	1			#37-365
Figure B	9"	2"	3.5"	3	3	1.5"	8	#37-366
Figure B	12"		5"		5	1"	12	#37-367
Figure B	15"	4"	3.25"	5	6	1.5"	14	#37-368
Figure B	18"		4"		8	1"	18	#37-369

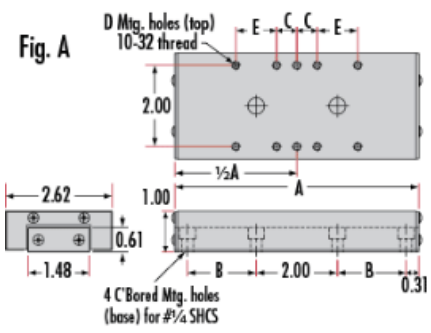

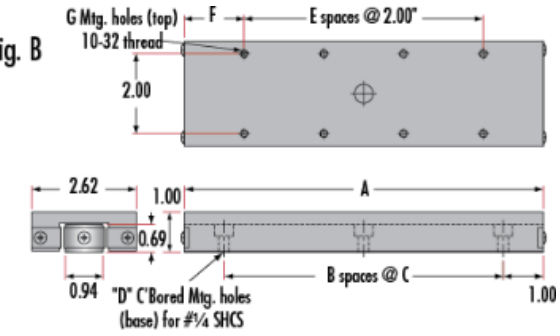

;