See all 15 Products in Family

TECHSPEC® M27 x 1.0 to C-Mount Adapter, 50mm Flange

M27 x 1.0 to C-Mount Adapter, 50mm Flange, #14-667

Stock **#14-667** **6 In Stock**

- 1 + **€49,25**

ADD TO CART

Volume Pricing	
Qty 1-9	**€49,25** each
Qty 10-24	**€43,75** each
Qty 25-99	**€38,25** each
Need More?	Request Quote

Prices shown are exclusive of VAT/local taxes

Product Downloads

General

Type:
Thread Adapter

Physical & Mechanical Properties

Length (mm):
21.50

Outer Diameter (mm):

50.0

Threading & Mounting

Mounting Threads:
M27 x 1.0 (Male) / C-Mount (Female)

Regulatory Compliance

RoHS 2015:
Compliant

Certificate of Conformance:
View

REACH 241:
Compliant

Product Details

- 1X – 3X and 2X – 8X Variable Magnification
- Non-Rotating Lenses Minimize Beam Wander
- Compact Galilean Designs with Fixed Housing Length
- TECHSPEC® Draconis® Broadband Beam Expanders Also Available

TECHSPEC® Research-Grade Variable Beam Expanders (RVBX) are ideal for high power laser applications where magnification changes may be required, such as prototyping or R&D. TECHSPEC Research-Grade Variable Beam Expanders feature λ/4 transmitted wavefront, Galilean designs, and high laser damage threshold AR coatings to ensure maximum transmittance while minimizing ghost reflections. Additionally, these beam expanders use internal translation and focusing mechanisms to variable adjust magnification and laser divergence without affecting overall housing length. This compact design removes the need to make system accommodations for changes in length and eases system integration.

TECHSPEC Research-Grade Variable Beam Expanders can be used to determine a system's required beam magnification in the prototyping phase of development. TECHSPEC® Draconis® Broadband Beam Expanders are available for production or OEM implementation. Please contact our Sales Department for custom magnification requirements.

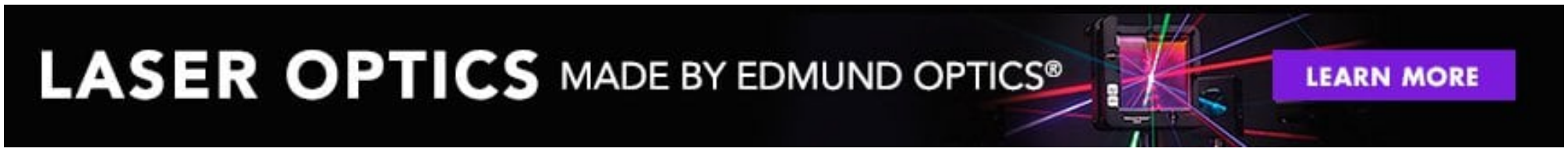

Technical Information

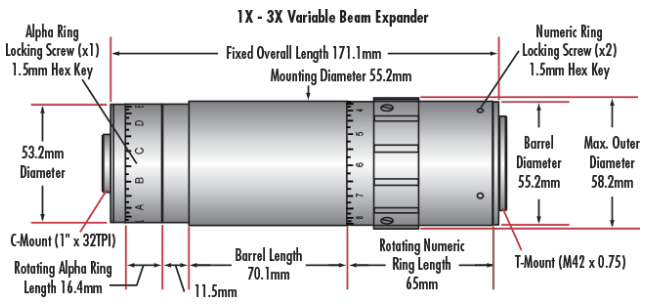

Design Wavelength	Stock No.	Fixed Overall Length A (mm)	Mounting Length E (mm)	Rotating Numeric Ring Length F (mm)	Rotating Alpha Ring Length G (mm)
355nm	#87-566	169.7	35.9	90.7	19.4
532nm	#87-567	169.3	31.5	70.4	43.7
Broadband VIS (633nm)	#87-569	169.3	31.5	70.4	43.7
Broadband NIR (785nm)	#87-570	169.3	31.5	70.4	43.7
1064nm	#87-568	169.3	31.5	70.4	43.7

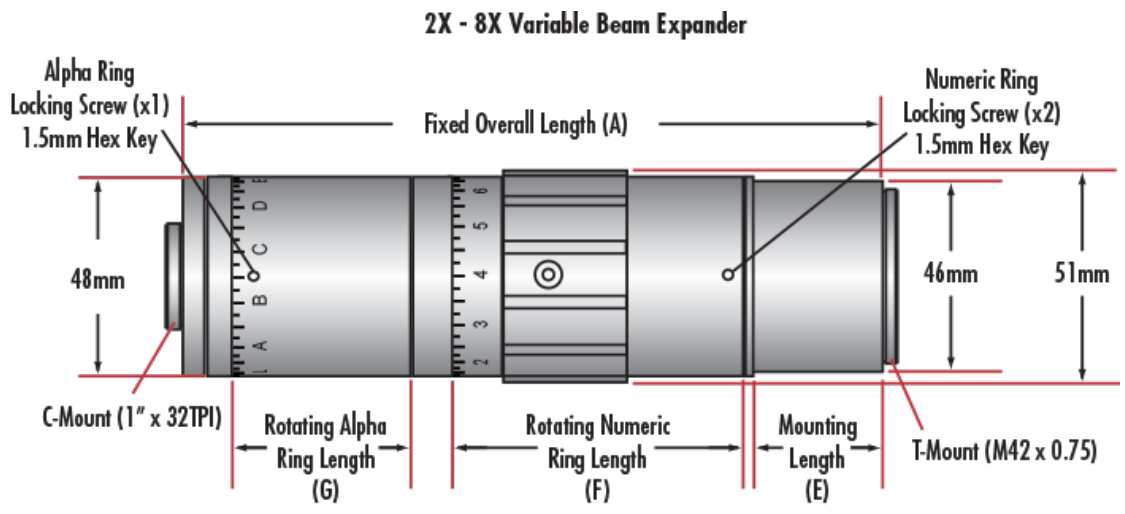

;