See all 10 Products in Family

TECHSPEC® M6 Male to M6 Male, Thread Adapter

Stock **#58-987** **20+ In Stock**

- 1 + **€4.50**

ADD TO CART

Volume Pricing	
Qty 1-9	**€4,50** each
Qty 10+	**€4,10** each
Need More?	Request Quote

Prices shown are exclusive of VAT/local taxes

Product Downloads

General

Type:
Metric

Threading & Mounting

Mounting Threads:
M6 x 1.0 (A), M6 x 1.0 (B)

Regulatory Compliance

RoHS 2015:	Compliant
Certificate of Conformance:	View
REACH 241:	Compliant

Product Details

- Stainless Steel Thread-to-Thread Adapters
- Interchangeable with Post Adapter Studs
- Can use on Top or Bottom of Posts

TECHSPEC® Thread Adapters are utilized for matching posts to optic mount threads or to table threads. Each Adapter is laser engraved with thread values for easy integration. Adapters for the Bottom of Posts (or even Post Holders) are easier to work on tables than typical SHSS. TECHSPEC® Thread Adapters threads are all male and have a stainless steel construction. The adapters are interchangeable with post adapter studs and can be used on the top or bottom of posts.
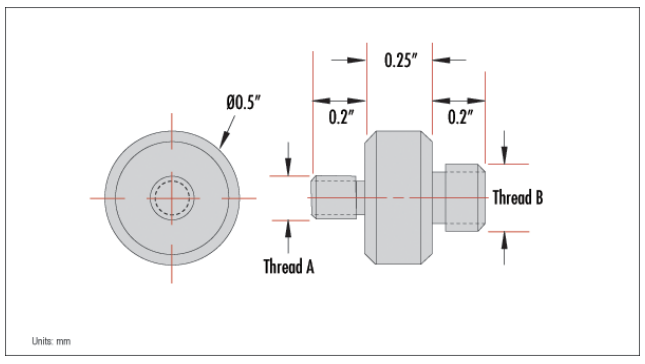
Technical Information