Optotune -2 to +3 diopter, NIR Temperature Compensation, C-Mount EL-16-40-TC-NIR-5D-1-C

See More by Optotune

Stock **#78-518** NEW **1 In Stock**

- 1 + **€1.795**,00

ADD TO CART

Volume Pricing	
Qty 1+	**€1.795,00** each
Need More?	Request Quote

Prices shown are exclusive of VAT/local taxes

Note: This item requires accessories for use | Learn More

Product Downloads

SPECIFICATIONS

General

Type:

Specialty Lens

Driver:
#88-940

Lifecycles:
1,000,000,000

Model Number:
EL-16-40-TC-NIR-5D-1-C

Response Time (ms):
5 (typical @ 30°C)

Settling Time (ms):
25 (typical @ 30°C)

Physical & Mechanical Properties

Clear Aperture CA (mm):
16.00

Dimensions (mm):
47.0 x 70.0

Thickness (mm):
17.60

Optical Properties

Substrate:
Low Dispersion Polymer

Coating:
BBAR (850-1500nm)

Wavelength Range (nm):
850 - 1500

Abbe Number (v_d):
100.00

Focus Range (mm):
-2 to +3 diopter
-500 to +333mm

Index of Refraction (n_d):
1.3

Transmitted Wavefront Error, RMS:
Vertical: 0.15λ @ 525nm
Horizontal: 0.50λ @ 525nm

Electrical

Current (mA):
-250 to 250

Power Consumption (W):
0 - 0.7

Threading & Mounting

Mounting Threads:
C-Mount (Male)
C-Mount (Female)

Environmental & Durability Factors

Operating Temperature (°C):
-20 to +65

Regulatory Compliance

RoHS 2015:
Compliant

Certificate of Conformance:
View

Reach 251:
Compliant

PRODUCT DETAILS

- Multiple Imaging Lens Mounting Options
- Large Clear Aperture Ideal for Machine Vision Applications
- Industrial Hirose Connection with Temperature Sensing
- Integrated Temperature Control for Improved Thermal Effects
- Optotune Focus Tunable Lenses 10mm Clear Aperture Hirose Connector and Lens Drivers Also Available

Optotune Focus Tunable Lenses 16mm Clear Aperture Hirose Connector eliminate the need for optomechanical subsystems otherwise required to alter the focal length of your imaging application. They feature large clear apertures and are offered in many popular machine vision mounting options, making them ideal for inspection and detection systems. These lenses offer continuous focusability from -2 to +3 diopters controlled by an industrial Hirose connection. Optotune Focus Tunable Lenses 16mm Clear Aperture Hirose Connector exhibit no autofluorescence, reducing unwanted light on the detector and feature integrated temperature sensing to provide open loop reproducibility typically within 0.1 diopters. The lenses are made of low dispersion polymer and feature a broadband anti-reflection coating.

Note: Hirose cables, available in 1m length (#88-941), 3m length (#33-468) or 5m length (#23-852), and Lens Driver (#88-940) are required and sold separately. The Gardasoft TR-CL180 Industrial Lens Controller (#13-803) is an optional accessory that provides repeatable, precision control of Optotune Industrial Focus-Tunable Lenses. Prescription data is available to model the effect an offset lens has on overall focal range.
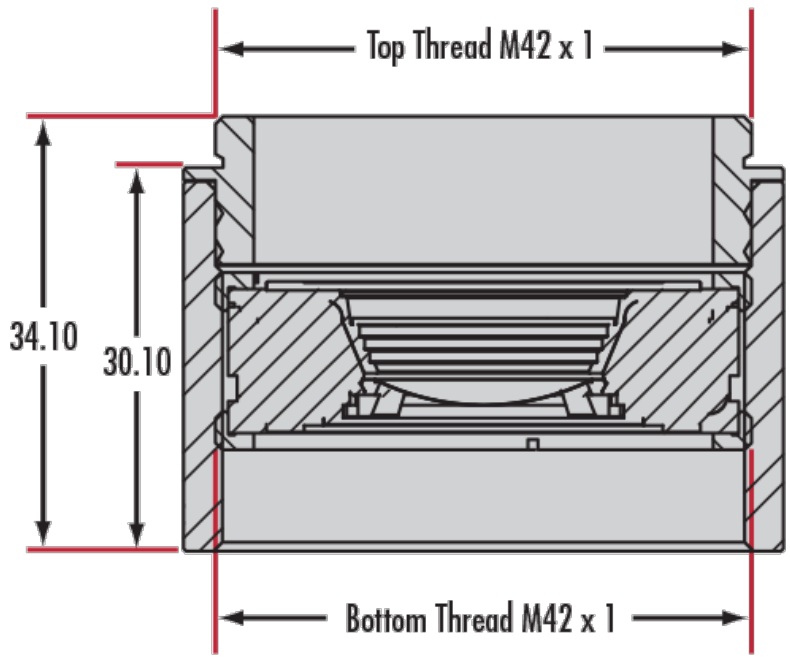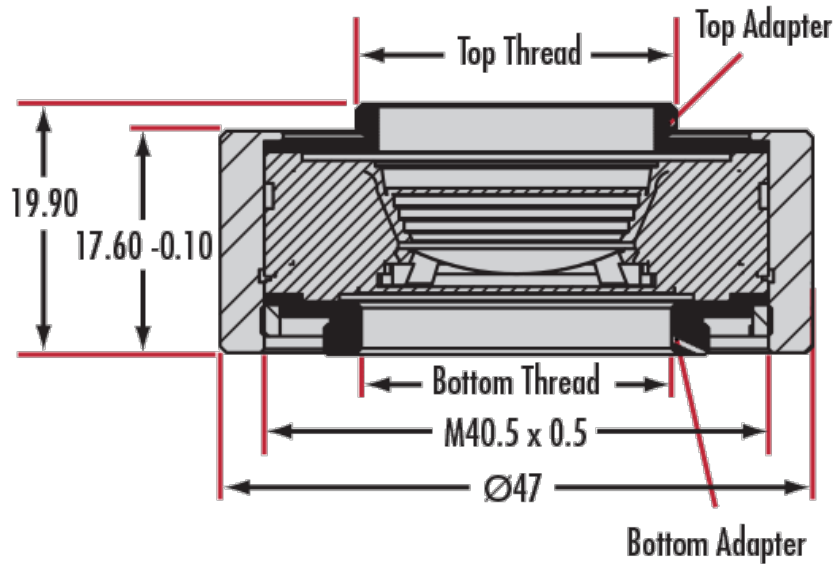
TECHNICAL INFORMATION