Step Adapter to M37.5 x 0.50 Filter Thread

Filter Thread Step Adapter

Stock **#66-934** **1 In Stock**

- 1 + **€54**.00

ADD TO CART

Volume Pricing	
Qty 1+	**€54,00** each
Need More?	Request Quote

Prices shown are exclusive of VAT/local taxes

Product Downloads

SPECIFICATIONS

General

Type:	Lens Accessory

Threading & Mounting

Mounting Threads:	

Female Thread: M46 x 0.75
Male Thread: M37.5 x 0.50

Regulatory Compliance

RoHS 2015:
Compliant

Certificate of Conformance:
View

Reach 242:
Compliant

PRODUCT DETAILS

- Compatible with Filter Threads from M25.5 to M46
- Prism Faces are AR Coated While Side Faces are Ground and Blackened

The Right Angle Adapter features a prism design and housing with a M46 mount that easily adapts to lenses with threading ranging from M25.5 to M43 by means of a step ring (sold separately). Fully adjustable through 360° and includes a locking thumb screw to maintain the positioning of the assembly.
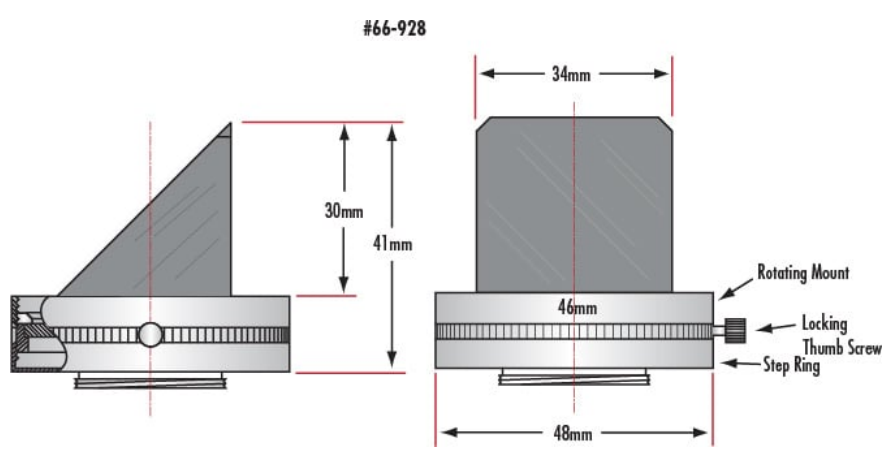
TECHNICAL INFORMATION